NO	DATE	REVISION	NAME
1			
2			

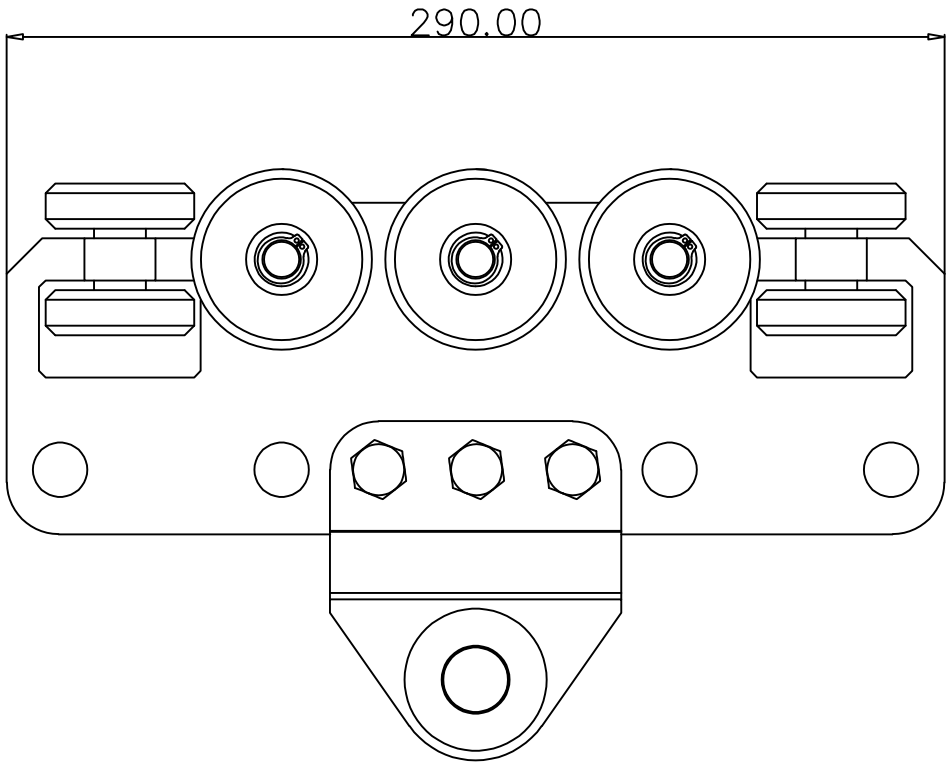

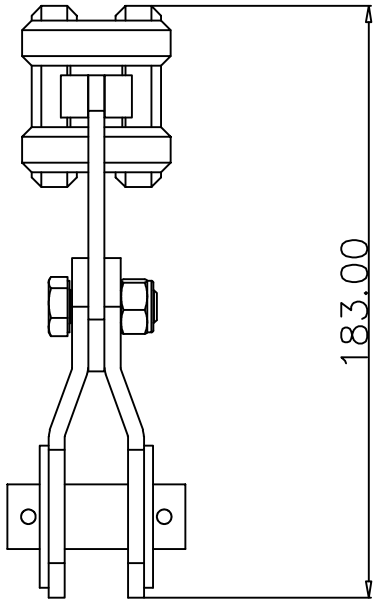

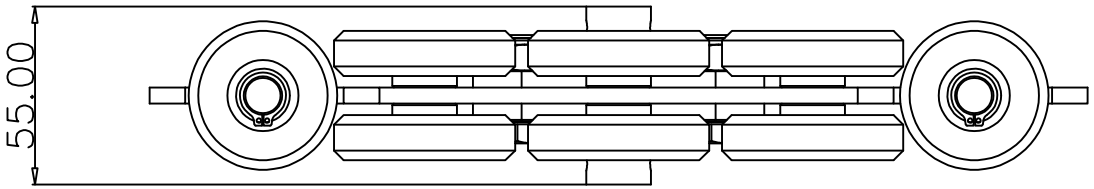

GENERAL TOLERANCE	
0.0	±0.05
0.00	±0.02
0.000	±0.005
SYMBOL	
K	KISS
L	LARGE
S	SMALL

-	-	-	-	-	-
No.	DESCRIPTION	SIZE	MATERIAL	Q'TY	REMARKS

MATERIAL		BUYER	-	DWG. DATE	-	
SHRINKAGE		PART NAME	-	BO 10BX TREO PALANG		
SCALE	1 / 1	MODEL NAME	-	DESIGNED	CHECKED	APPROVED
UNITS	M / M	DWG. No.	-	-	-	-
3rd ANGLES		FULL-SHARP		-		

(A2 594 X 420)