| NO | DATE | REVISION | NAME |
|---|---|---|---|
| 1 | | | |
| 2 | | | |

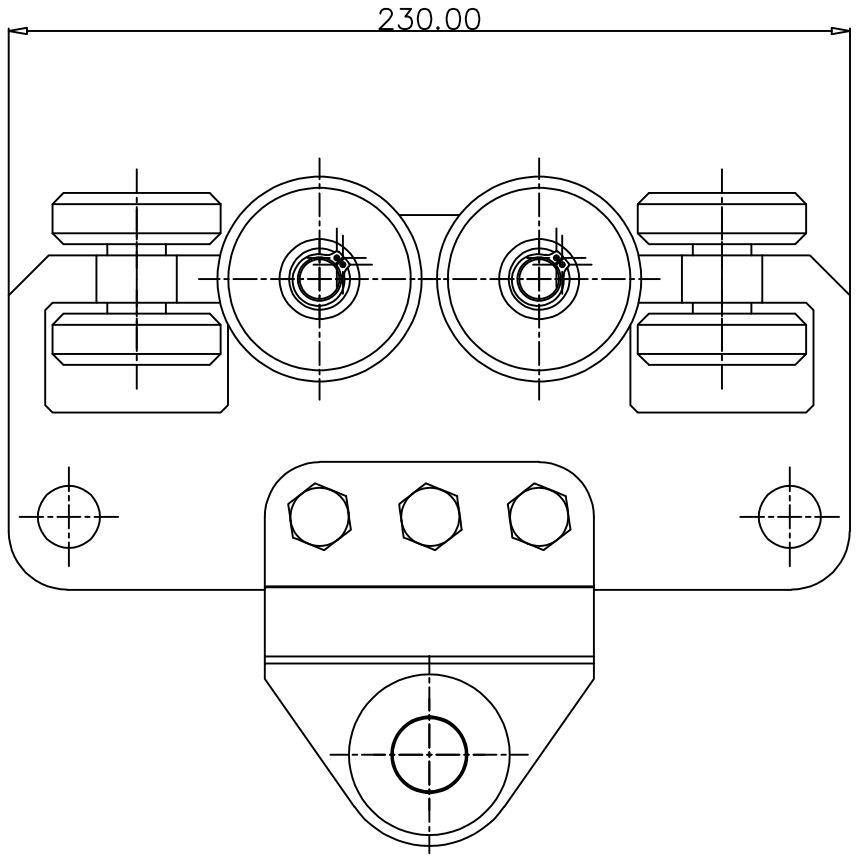


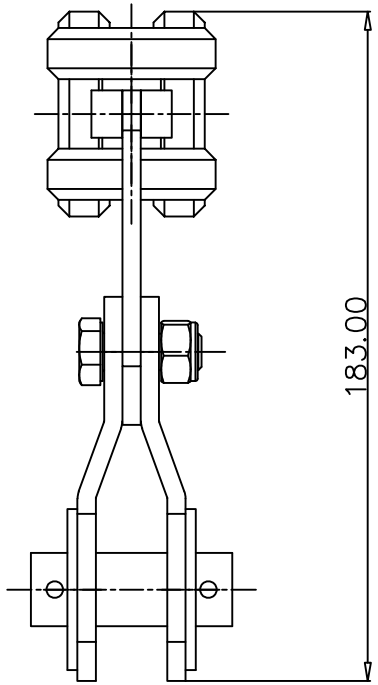


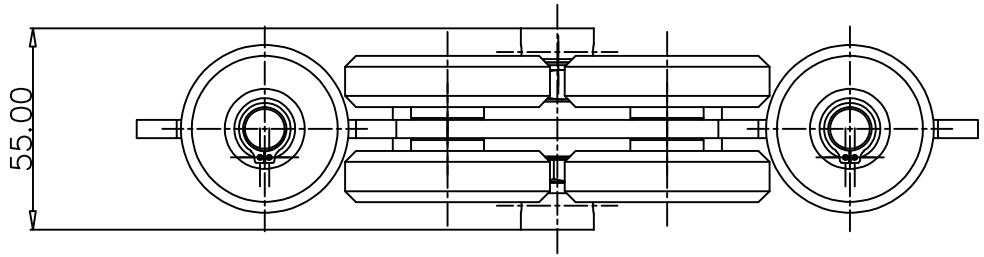


| GENERAL TOLERANCE | |
|---|---|
| 0.0 | ±0.05 |
| 0.00 | ±0.02 |
| 0.000 | ±0.005 |
| SYMBOL | |
| Ⓚ | KISS |
| Ⓛ | LARGE |
| Ⓢ | SMALL |

| No. | DESCRIPTION | SIZE | MATERIAL | Q'TY | REMARKS |
|---|---|---|---|---|---|
| | - | - | - | - | - |

| | | | | | |
|---|---|---|---|---|---|
| MATERIAL | | BUYER | - | DWG. DATE | - |
| SHRINKAGE | | PART NAME | - | | |
| SCALE | 1 / 1 | MODEL NAME | - | DESIGNED | CHECKED / APPROVED |
| UNITS | M / M | DWG. No. | - | - | - |
| 3rd ANGLES | | FULL-SHARP | | - | |

(A2 594 X 420)