NO	DATE	REVISION	NAME
1			
2			

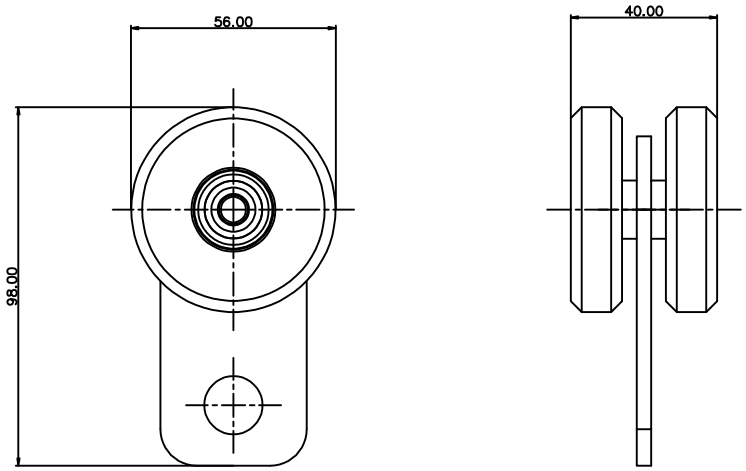

GENERAL TOLERANCE	
0.0	±0.05
0.00	±0.02
0.000	±0.005
SYMBOL	
Ⓚ	KISS
Ⓛ	LARGE
Ⓢ	SMALL

No.	- DESCRIPTION	- SIZE	- MATERIAL	- Q'TY	- REMARKS

MATERIAL		BUYER	-	DWG. DATE	-
SHRINKAGE		PART NAME	-	BỘ TRƯỞNG DAY DIEN	
SCALE	1 / 1	MODEL NAME	-	DESIGNED	CHECKED / APPROVED
UNITS	M / M	DWG. No.	-	-	- / -
3rd ANGLES		FULL-SHARP		-	

(A2 594 X 420)